KUM2601
Non-intrusive Level Gauge

Manual Book (Ver: 3.1)

XI'AN KACISE OPTRONICS TECH CO., LTD

TEL: +86-17719566736

WEBSITE: www.kacise.com

EMAIL: support@kacise.com

ADD: 2nd Building, Tianyuan International Mansion, High-tech Zone, Xi'an City, Shaanxi Province, China

CONTENT

1. Instrument Warranty and Service Scope 1
2. Opening Inspection and Cautions 2
2.1 Open Box Audit 2
2.2 Attentions 2
3. Storage and Transportation 3
3.1 Storage Conditions 3
3.2 Transport the Product to the Work Place 3
4. Product Introduction 4
4.1 Product Overview 4
4.2 Technical Parameters 4
4.3 Application Scope 6
4.3.1 Medium Viscosity 6
4.3.2 Medium Purity 6
4.3.3 Container 6
4.3.4 Medium Temperature Requirements 7
4.3.5 Instrument Environment Temperature 7
4.3.6 Explosion-Proof, Anti-Corrosion and Protection Grade 7
5. Level Gauge Dimension 8
5.1 Level Gauge Host Dimension 8
5.2 Sensor Probe Dimension 8
6. Electrical Connection 9
7. Instrument Debugging Parameter Description 11
7.1 Parameter setting man-machine interface 11
7.2 LCD Main Screen Description 12
7.3 Level Gauge LCD Waveform Interface Description 13
7.4 Menu of Level Gauge Parameters 14
7.4.1 Menu description of user parameters 14
7.4.2 Scope and Definition of User Parameter Settings 15
8. Instrument Installation and Debugging 18
8.1 Preparations Before Installation 18
8.2 Probe Installation Position Selection 18
8.3 Probe Installation and Debugging Procedures 19
8.3.1 Installation and Debugging of Measuring Probe 19
8.3.2 Installation and Debugging of Calibration Probe 25
8.3.3 Determination of Sound speed in Medium 26
8.4 Instrument Installation and Wiring 29
8.5 Functional Confirmation and Probe Sealing 32
9. Maintenance and Repair 34
10. Fault Treatment 35
11. Mode Selection 36

1. Instrument Warranty and Service Scope

From the date of shipment, the instrument Host is guaranteed for one year, and the instrument repair and maintenance are guaranteed for half a year. This guarantee is limited to the instrument users of the original factory purchaser or designated distributor and is not applicable to any instrument users who use the instrument incorrectly for human reasons, modify, neglect or cause damage by accident or abnormal use.

Free maintenance is provided for faulty instruments returned within the scope of warranty. To obtain the warranty service, please contact the after-sales service department and attach the fault description. With the permission of the company, the instrument will be sent to the after-sales service department.

Report errors

If the instrument has passed the warranty period or is confirmed that the failure of the instrument is caused by misuse, modification, negligence, accident and abnormal use, the maintenance cost budget will be provided according to the relevant maintenance fee standards and will be maintained after approval. After the instrument is repaired, it will be sent back to the customer, who will pay for the maintenance and transportation. (Attached: Warranty Policy)

2. Opening Inspection and Cautions

2.1 Open Box Audit

- Manual book
- Qualification Certificate
- Packing list
- Host
- Check the name, model, etc. on the nameplate
- Check whether the shell is in good condition and observe whether the window glass cover is broken.
- Check the accompanying items against the packing list.

Please verify the instrument specifications and accessories according to the packing list to ensure they are correct and complete. If there are any issues, please contact the customer service center for replacement in a timely manner.

2.2 Attentions

Please read the instruction before installing the instrument.

Due to product upgrades, modifications may occur without prior notice. Please refer to the actual product for the most accurate information.

3. Storage and Transportation

3.1 Storage Conditions

- Storage Temperature: - 40 ~+60 ℃
- Use original packaging

3.2 Transport the Product to the Work Place

- Transport level gauge to work place or process connection with original packaging
- During transportation and storage, collision, moisture and chemical erosion should be prevented.

4. Product Introduction

4.1 Product Overview

KUM2601 Non-intrusive level gauge (hereinafter referred to as level gauge) is a kind of instrument developed by our company, which uses sonar ranging principle to measure liquid level inside of the container from the outside (bottom) of the container. This product realizes complete isolation measurement.

The liquid level gauge breaks the traditional installation method of open tank contact, and realizes the real non-contact measurement of liquid level height in sealed container. Sonar sensor (probe) is installed directly below the outer wall of the vessel under test (bottom). It does not need to open a hole in the vessel under test. It is easy to install and can be installed without stopping production. It can accurately measure the liquid levels of various toxic substances, strong acids, alkalis and various pure liquids in high temperature and high pressure sealed containers.

4.2 Technical Parameters

Non-Intrusive Level Gauge	Two-wire	Four-wire
Measuring Range	3m, 5m, 10m, 15m, 20m, 30m, 50m	
Display Resolution	1mm	
Short-Term Repetition	1mm	
Error	±1‰FS、 ±2‰FS、 ±5‰FS	
Temperature Range	-45℃~+100℃	
Accuracy	1℃	
Output	4～20mA (Maximum load 500Ω), HART、Modbus	
Power Supply	DC24V (22V~36V)	DC24V (18V~30V)
Power	< 1 W	< 1 W
Communication	RS-485、Infrared, HART、Modbus	
Relay Alarm Output	AC 250V 5A, DC 30V 5A	
Ambient Temperature Host	-40℃~+80℃	
Ambient Temperature Display	-20℃~+70℃	
Ambient Temperature Sensor	-50℃~+100℃	
Ambient humidity	(0%～95%)RH	
Explosion-proof	ExdⅡCT6	
Protection	IP65, IP67	
Display	128×64 LCD	
Blind Area	< 30mm Under ideal working conditions	
Electrical Interface	M20X1.5 (F), 1/2 NPT (F)	
Cable Length	5m, optional	
Host size / weight	158mmx122mmx148mm, 2kg, base hole dia M5	

4.3 Application Scope

4.3.1 Medium Viscosity

In general, the dynamic viscosity of the measured medium is required to be less than 10 mPa.S. When 10 mPa.S < dynamic viscosity < 30 mPa.S, the instrument range may be reduced and the blind area increased. When dynamic viscosity > 30 mPa. S, it can not be measured. (1 mPa.S = 1 cP)
Notice: With the increase of temperature, the viscosity decreases. Most of the high viscosity liquids are more obviously affected by temperature. Therefore, temperature should be paid attention to when measuring the high viscosity liquids.

4.3.2 Medium Purity

There should be no dense bubbles in liquids.
There should be no large amount of suspended substances, such as crystals, in the liquid.
There should be no large amount of sediment in the liquid, such as sediment.

4.3.3 Container

The container wall at the installation of sonar probe requires that it be made of hard material capable of transmitting signals well. For example: carbon steel, stainless steel, various hard metals, fiberglass reinforced plastics, epoxy resin, hard plastics, ceramics, glass, hard rubber and other materials or other composite materials. The inner and outer surface of the container wall should be flat. If the container wall is mufti-layer material, there should be close contact between layers without air bubble or gas inter layer. For example, vulcanized hard rubber lining, epoxy resin lining, stainless steel lining, titanium lining and so on.

4.3.4 Medium Temperature Requirements

The allowable temperature range of the probe is -50 ~ 100℃. Because the probe is close to the wall of the container, the temperature of the probe is similar to that of the wall of the container. Therefore, the temperature of the medium to be measured is generally required to be within - 50~100℃.

4.3.5 Instrument Ambient Temperature

The ambient temperature range of the main engine of the liquid level gauge is -40 ~80℃. In the northern area, it is recommended to use instrument protection box. In the areas with strong direct sunlight, it is suggested to install the instrument in a shady place or use a sunshade, which can avoid the excessive temperature in the instrument caused by the sun exposure, and also can provide good ventilation and heat dissipation.

4.3.6 Explosion-Proof, Anti-Corrosion and Protection Grade

The external level gauge adopts the explosion-proof and anti-corrosion structure of aluminum alloy casting seal, epoxy spraying on the surface. It is suitable for harsh environment with explosive mixture gas, medium concentration corrosive gas and 0-95% humidity range.
Non-intrusive level gauge Explosion-proof grade: ExdIICT6.

Anti-corrosion grade: WF1 Outdoor intermediate corrosion protection Protection grade: IP67

5. Level Gauge Dimension

5.1 Host Dimension

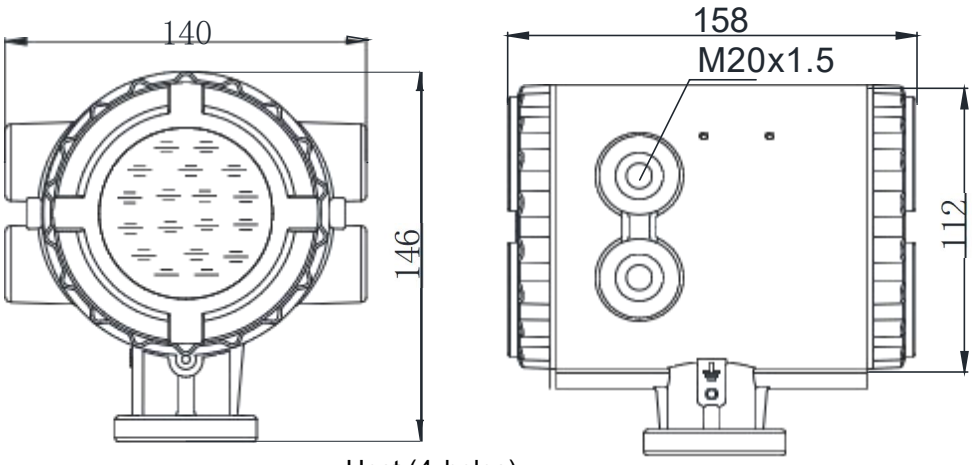

Host (4 holes)

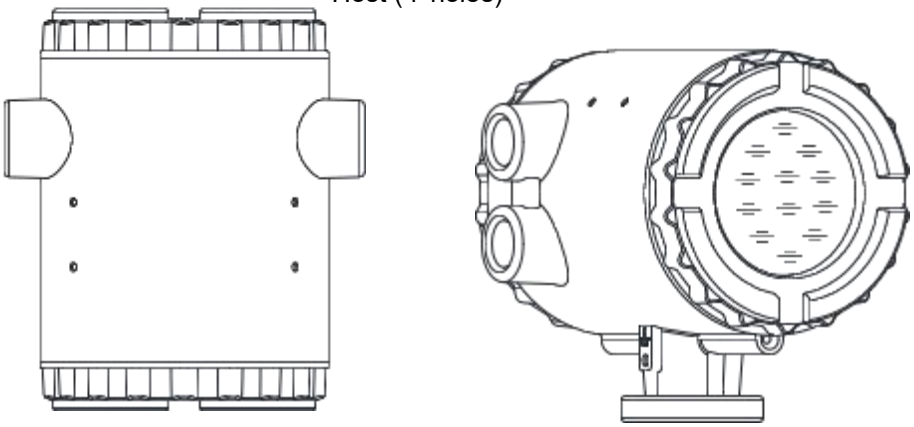

Host (2 holes)

Figure 1 Dimension of host (unit: mm)

5.2 Sensor Probe Dimension

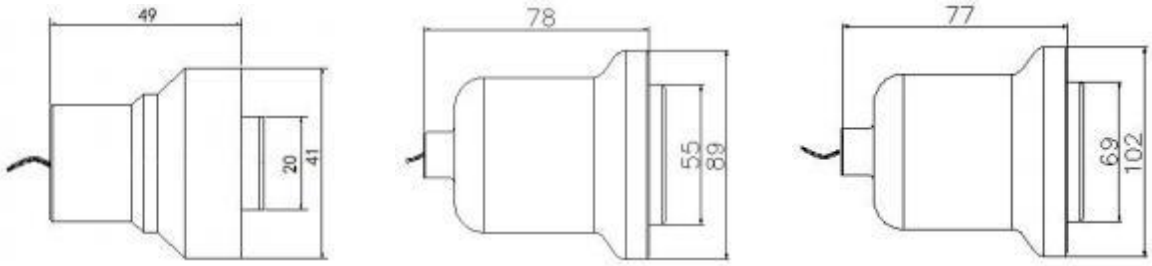

16 probe 45 probe 60 probe

Figure 2 Dimension of probe (unit: mm)

6. Electrical Connection

- The terminal of the level gauge in Figure 3.

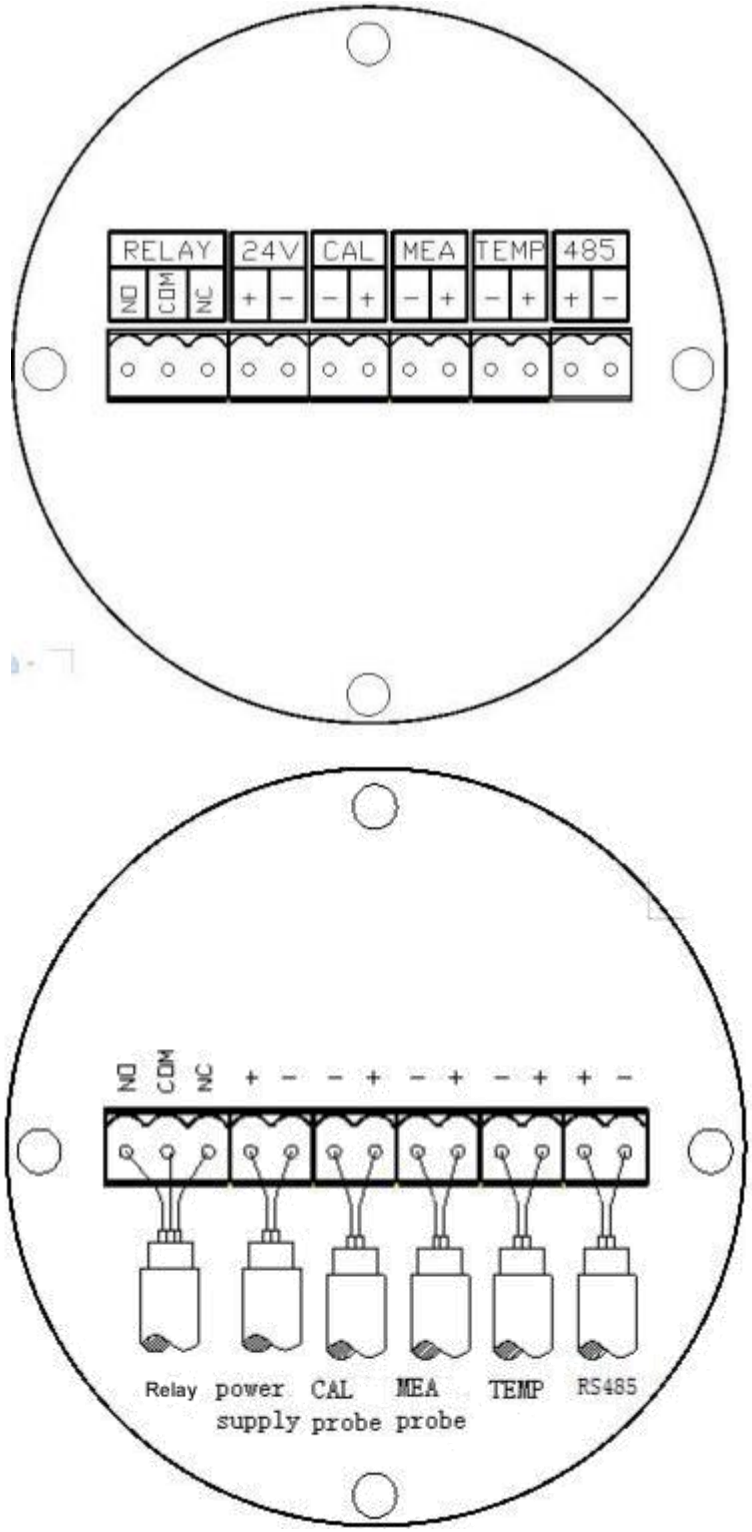

Figure 3 Terminal of level gauge

- Terminals Definition

Mark	Note
RELAY (NO)	Relay Alarm Normally Open
RELAY (COM)	Relay Alarm Common
RELAY (NC)	Relay Alarm Close
24V (+)	Dc 24V Power+
24V (-)	Dc 24Vpower-
CAL (+)	Calibration Probe Signal
CAL (-)	Calibration Probe Grand
MEA (+)	Measure Probe Signal
MEA (-)	Measure Probe Grand
TEMP (+)	Temperature Sensor Signal
TEMP (-)	Temperature Sensor Grand
485 (+)	Rs485 (Modbus) Modbus A (+)
485 (-)	Rs485 (Modbus) Modbus B (-)

Power Supply Diagram Two wires design

The power supply and signal output are the same wires

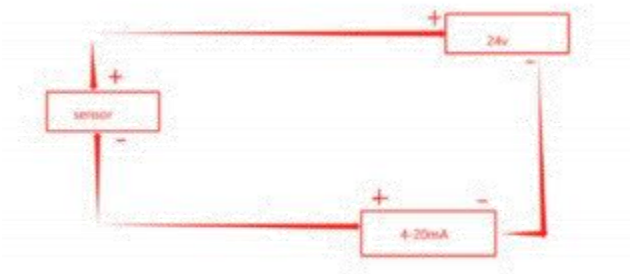

- Composite Probe Wiring

Compound probe is a probe that integrates liquid level measurement and temperature calibration. The composite probe line consists of two independent single core shielding lines, the red single core shielding line is the liquid level measuring probe line, and the black single core shielding line is the temperature measuring probe line. The core line is the positive pole, and the shielding layer is the negative pole.

7. Instrument Debugging Parameter Description

7.1 Parameter setting man-machine interface

The instrument uses infrared remote controller to set parameters.

The key functions are as follows:

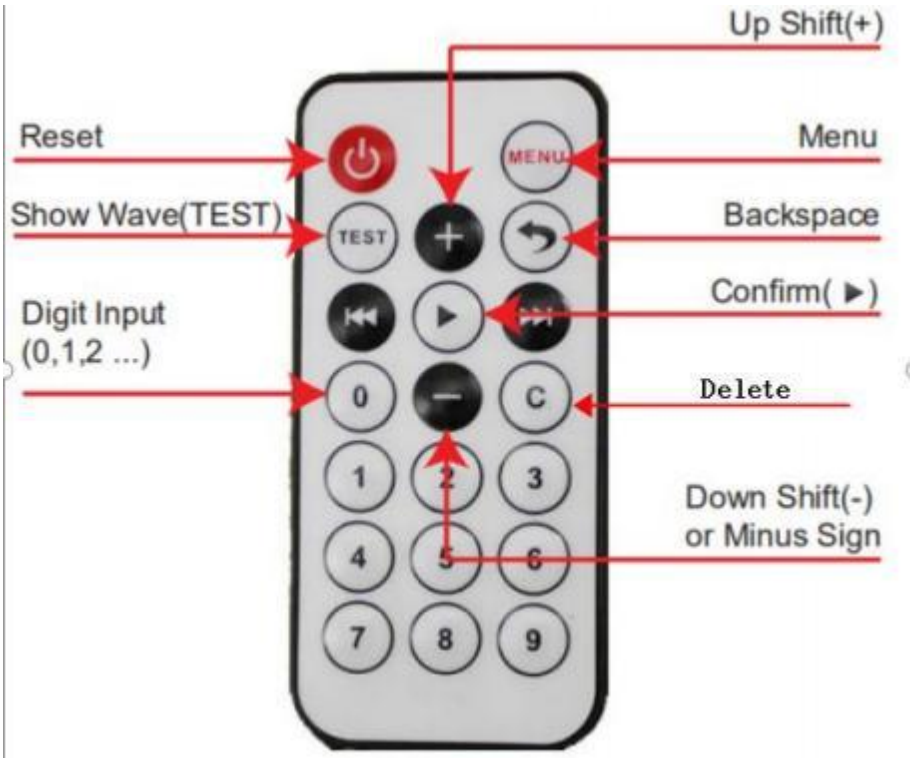

Figure 4 IR Controller Key Description

- Reset/restart: Reset or restart the instrument.
- Menu: Open the menu, check and change the working parameters.
- TEST: Display real-time echo wave and parameters of the instrument and assist in debugging and diagnosis.
- Backspace: Under the menu or waveform interface, return to the main working interface.
- The numeric keys, confirm key, delete key, and directional keys (up, down, left, right) work together to set parameters in the menu and waveform interface.

7.2 LCD Main Screen Description

①	Work Indicator	Blinking tips at work
②	Level Display	(m) Level Value (%) Percentage
③	Working Mode	SM: Single probe measure DC: Diameter calibration TC: Temperature calibration DT: Double ways calibration
④	Fault Code	00: No fault 01: Current Output Fault 02: Receiving waveform abnormality 08: Level entering dead zone 10: No echo signals 20: Abnormal transmitting waveform 80: Excessive noise interference
⑤	Temperature	When the temperature calibration function is turned on, the measured temperature value is displayed. When the temperature probe fails, Err℃ is displayed.
⑥	Working Probe	RUN: measuring probe is working CAL: calibration probe is working

7.3 Level Gauge LCD Waveform Interface Description

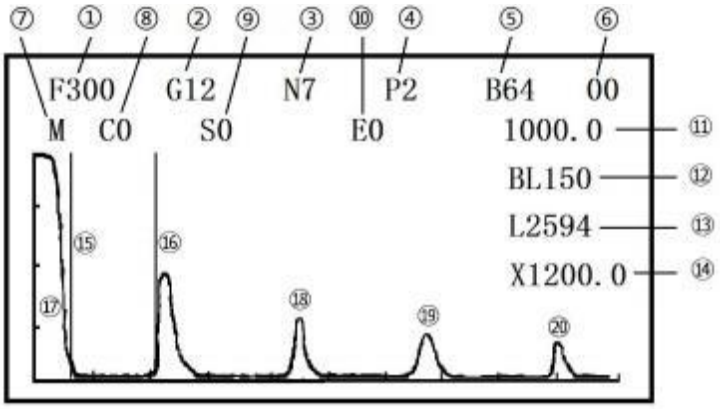

①	F (100~2000) Work Frequency
②	G (0~96) Work Gain
③	N (1~ 10) Number of Emission Pulses
④	P (1/2) Power Grade
⑤	B (1~ 1000) Envelope Width
⑥	(00~FF) Fault Code
⑦	(M/C) Measure probe / Calibration probe Waveform Switching Display
⑧	C (0/1) Manual Calibrate the Sound Speed
⑨	Sxxxxx (unit: mm) Initial Position of Waveform Display
⑩	Exxxxx (unit: mm)Termination Position of Waveform Display
⑪	(unit: m/s) Sound Speed Value
⑫	BLxxx (unit: mm) Blind Area Value
⑬	Lxxxx (unit: mm) Level Value
⑭	(unit: mm) Waveform area X-axis scale value
⑮	Blind Area Zone Position
⑯	Echo Position (Primary Echo)
⑰	Transmitting Wave
⑱	Second Echo
⑲	Third Echo
⑳	Fourth Echo

7.4 Menu of Level Gauge Parameters

7.4.1 Menu description of user parameters

Basic Setting		Max Measure Range
		Sound Speed
		Transfer Volume
Measure Mode		Single Probe
		Diameter Calibration
		Temperature Calibration
		Double Ways Calibration
Diameter Calibration Set		Calibration Distance
		Probe Height
		Calibration Interval
Temperature Calibration Set		Medium
		Temperature Migration
		Filtering Time
Debug Mode		Automatic Measurement Mode
		Manual Measurement Mode
		Automatic Calibration Mode
		Manual Calibration Mode
Working Parameters	Measurement	Frequency, Gain Type, Gain, Power Pulse Number, Envelope Width
	Calibration	Frequency, Gain Type, Gain, Power Pulse Number, Envelope Width
Backup User Parameters		
Restore User Parameters		

7.4.2 Scope and Definition of User Parameter Settings

- **Basic Setting**

① Measure Range (50~50000)mm: Depending on the working condition, it indicates the highest liquid level that can be measured by the level gauge, and also determines the magnitude of 4-20 mA current output.

② Sound Speed (400~ 1800)m/s: Depending on the medium to be measured, it represents the sound velocity value used by the level gauge in the mode of single probe operation.

③ Transfer Volume (-9999~9999) mm : According to the specific working conditions, it indicates the displacement of the installation position of the liquid level gauge measuring probe relative to the zero liquid position in the field.

- **Measure Mode**

① Single Probe Mode: The level gauge operates withe a fixed sound speed.

② Diameter Calibration Mode: The liquid level gauge operates at sound speed after successful calibration with diameter.

③ Temperature Calibration Mode: The liquid level meter works at sound speed after temperature compensation.

④ Double Ways Calibration Mode: When measuring liquid levels above the calibration probe installation position, the system uses the calibrated sound speed obtained after successful diameter calibration. If the liquid level is below the probe position, it uses the temperature-compensated sound speed for measurement.

- **Diameter Calibration Setting**

① Calibration Distance (50-50000)mm : Indicates the diameter distance of the calibration probe.

② Probe Height (50-50000)mm: The installation position of calibration probe is relative to the vertical height of measurement probe.

③ Calibration Interval (1-9999)min: Represents how often diameter calibration is enabled and the sound velocity is calibrated once. The default is 20 minutes.

- **Temperature Calibration Setting**

① Medium : Select the type of medium to be measured; when temperature calibration is enabled, the sound velocity is calibrated according to the type of medium.

② Temperature Migration (-100~ 100) ℃ : When the temperature measured by liquid level gauge deviates from the actual temperature, the temperature error is corrected by "temperature offset".

③ Filtering Time (1-600) min : Adjust the parameters that show how fast the temperature changes.

- **Debug Mode**

① Automatic Measurement Mode: The instrument automatically searches the echo signal of the probe, calculates and stores the "best working parameters" and then works with this parameter.

② Manual Measurement Mode: Manually adjust the working parameters of the probe to get the best echo signal.

③ Automatic Calibration Mode: The instrument automatically searches for the echo signal of the calibration probe, calculates and stores the "best working parameters" and then works with this parameter.

④ Manual Calibration Mode : Manually adjust the working parameters of the calibration probe to get the best echo signal.

- **Working Parameters**

① Measurement Parameters: Indicate the working parameters of the probe.

② Frequency (100~2000)kHz: Represents the transmission frequency of sonar waves.

③ Gain Type (Automatic gain, fixed gain): Automatic gain means that the host automatically adjusts the internal parameters according to the strength of the echo signal, so that the echo signal level is within the expected value. Fixed gain is only used for internal testing.

④ Gain (0~96): Represents the strength of the echo signal. The larger the gain, the smaller the echo signal.

⑤ Power (low grade P1 ， high grade P2) : It is used to set transmitting power, select "low-grade" for EASY-TO-TEST conditions and "high-grade" for complex and difficult-to-test conditions.

⑥ Envelope Width (1~ 1000) : The default value of 64 is usually used for the size of the window enveloped by the waveform. The smaller the envelope width is, the more accurate the waveform is and the smoother the waveform is.

⑦ Calibration Parameter : Represents the working parameters of the calibration probe. Calibration parameter items and measurement parameters are the same, and Parameter definitions are the same, but the probes used are different.

8. Instrument Installation and Debugging

8.1 Preparations Before Installation

① Before debugging, it is necessary to ensure that the liquid level in the tank is higher than 1 m and the liquid level meets the calibration conditions of diameter.

② Understand the internal structure and pipeline arrangement of the tank, and obtain the information of tank diameter, measurement range, wall thickness, etc.

③ Tools: slotted screwdriver (3*75mm) wire stripper (7mm²) , handmade knife，adjustable wrench (≥10 inches)，inner hexagon spanner (M5)，DC 24Vpower supply。

④ After the tool is ready, the product is checked and the packing list is checked to determine whether the material is complete.

8.2 Probe Installation Position Selection

According to the equipment diagram of storage tank, the optimum installation point of probe is selected.

- **Basic Principles of Probe Installation**

The probe pointing is completely perpendicular to the liquid level, and the calibration probe pointing is parallel to the liquid level.
The probe is installed as far away as possible from the inlet and outlet and the weld. The probe points to the front without any obstruction such as pipeline.

- **Selection of Probe Installation Location for Different Tank Types**

① Horizontal Tanks : The measuring probe must be installed at the bottom of the tank (the inclination of the probe will lead to the increase of blind area and instability of measurement); the calibration probe should be installed at the horizontal diameter position of 1/2 tank height.

② Vertical Tanks: The measuring probe is mounted on the bottom plate and is as far away from the tank wall as possible, at least 10 cm away from the edge of the tank wall. The calibration probe can be installed in the horizontal diameter position of the tank body above 1 m in height.

③ Sphere Tanks : The probe can be installed on the bottom manhole flange. If there is more precipitation in the tank, it can be installed next to the manhole flange. The probe should be as close to the manhole as possible. The calibration probe is installed at the equatorial position of the spherical tank.

8.3 Probe Installation and Debugging Procedures

8.3.1 Installation and Debugging of Measuring Probe

- **Polishing Tank Wall Surface**

After selecting the installation position of the probe (removing the protective material of the tank at the installation), the surface of the tank wall is polished and cleaned with sandpaper. It is required to polish a circular surface not less than the diameter of the probe base. The surface should be smooth and smooth, free of oil pollution and fine particles.
As shown in step 1:

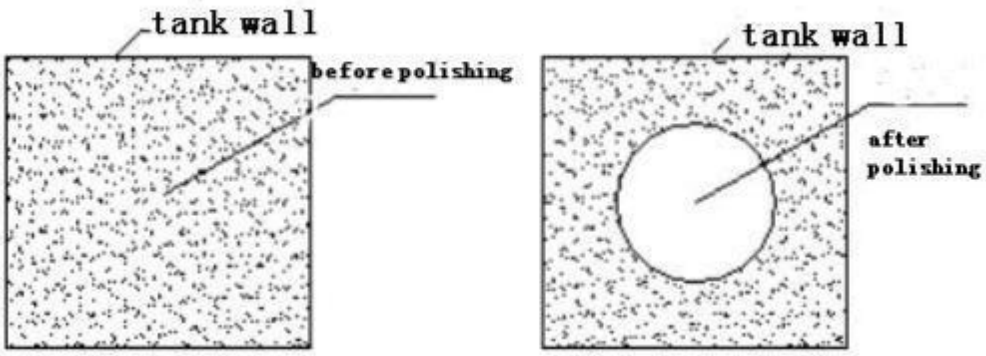

Step1 Sandpaper polishing tank wall

- **Silicone grease**

Remove the probe from the probe base and apply a layer of silicone grease (1-2mm thick) evenly on the front surface of the probe and on the polishing surface of the tank wall.

As show in step 2

Step 2 Remove probe and apply silicone grease

- **Installation of Measuring Probe**

The probe is attached to the smooth area after polishing, then the probe is pressed by force and rotated slowly.

As show in step 3:

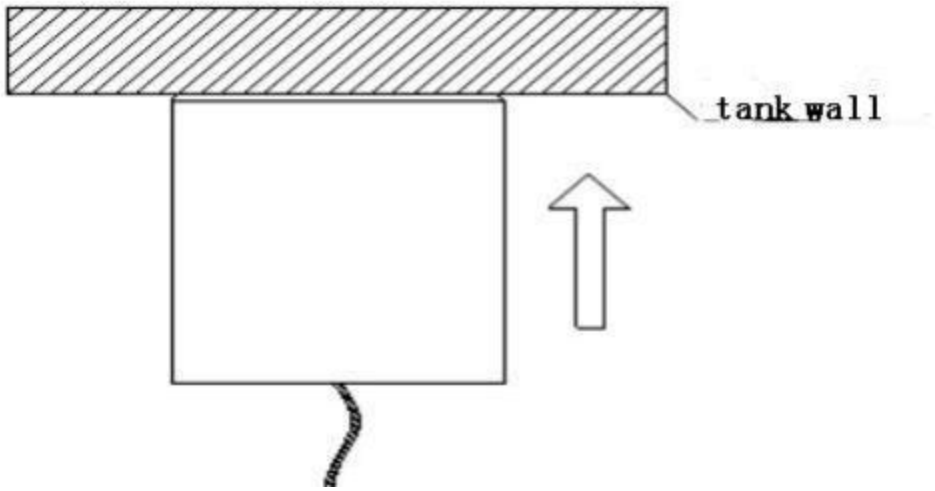

Step 3 Probe closely attached to the tank wall.

Probe falling to the ground may cause permanent damage, we must do a good job of protection measures.

Silicone grease can make the probe directly adsorbed on the tank wall. In order to prevent the falling of the probe, it can be gently held by the hand, or the probe line of the probe side should be temporarily fixed at the installation site to prevent the probe from falling to the ground. If the probe installation position is very low, soft foam foam can be placed underneath it, so as to avoid the probe falling directly to the ground.

- **Wires Connection**

DC 24V power supply is connected to "24V" orange terminal, measurement probe is connected to "MEA" terminal (when composite probe is connected to red single-core shielding wire), core wire is positive, shielding layer is negative, do not reverse. The terminal is shown in figure 3.

- **Parameter Setting**

Facing the main display screen, press the "Menu" button on the remote control, and the instrument will display the "Main Menu"., as shown in the following figure:

Press the "Confirmation" key to enter the "user parameters", then the "dynamic code: XX" will be displayed, prompting you to enter the password.

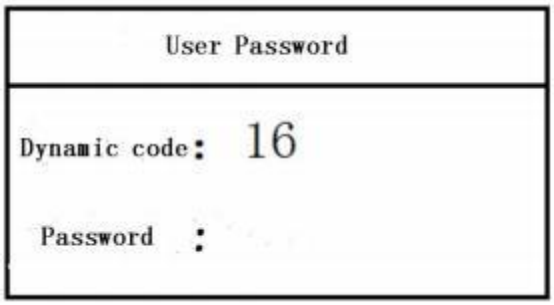

The password value is "XX" multiplied by 2 and subtracted by 1. For example, dynamic code: 16, then the password value is equal to 16 *2-1; input 31, press the "Confirmation" key to enter the "user parameters".

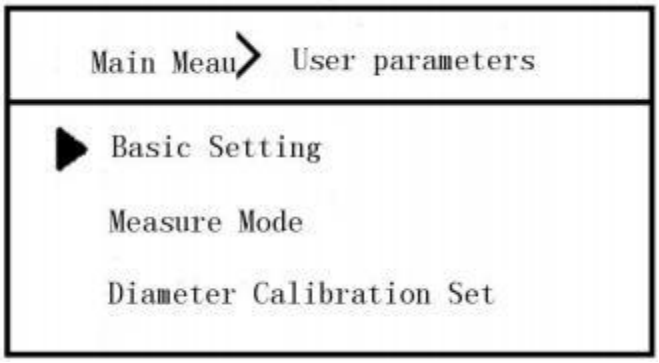

After entering "User Parameters", press "Confirmation" to enter "Basic Settings".

Firstly, according to the working conditions, set the "range", press the "Confirmation" key, after the range value is reversed, use the digital key to input the range value, and then press the "Confirmation" key to confirm. Press the " -" button to select the "Sound velocity" downward, press the "Confirmation" button to reflect the sound velocity value, input the sound velocity value of the medium (if the sound velocity of the medium is uncertain, it can be set to 1000), and press the "Confirmation" button to confirm. The same step can modify the "Migration" and then press the "return" key to return to the "user parameters" interface.

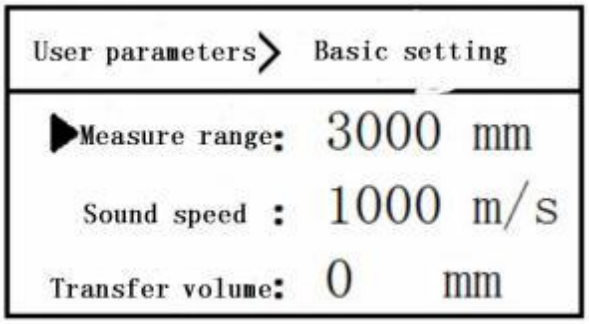

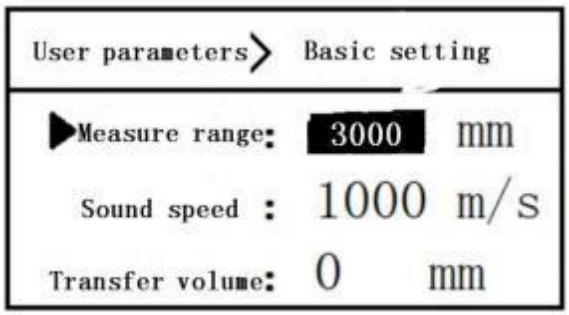

Press "-" to select the "Measurement mode", "Confirmation" to enter, select the measurement mode according to the product type, and "Confirmation" to return by "Return" key.

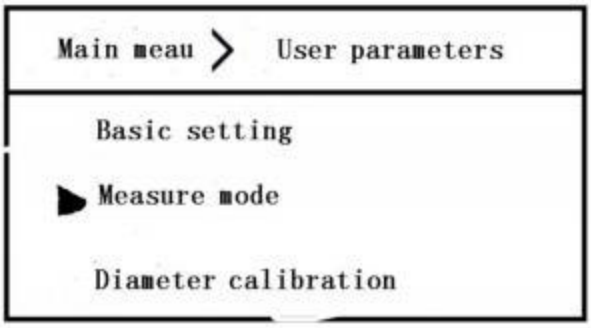

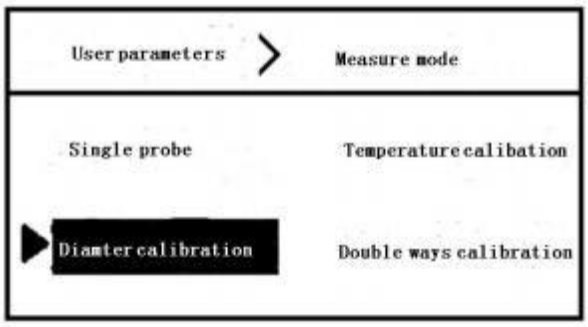

Press the "-" button to select "Diameter Calibration Settings" (set only in "Diameter Calibration" or "Double Calibration" mode, other working modes do not need to set this), "Calibration Distance", "Probe Height" and "Calibration interval" are set after "Confirmation". The calibration period can be set to the default value of 20 minutes, and then "Return".

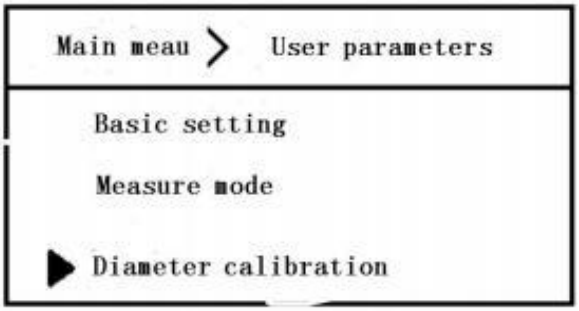

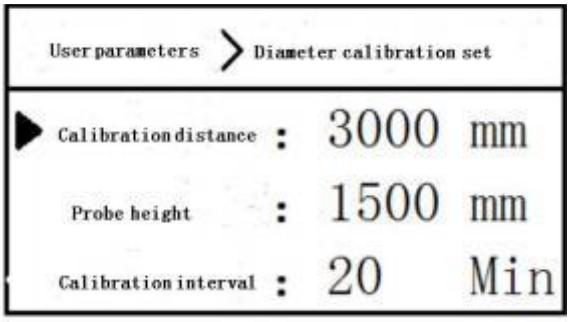

Press the "-" button to select the "Temperature calibration settings" (only in the "Temperature calibration" or "Double calibration" mode settings, other working modes do not need to set this). After entering, select the measured "Medium", "Confirmation" and press the "Return" button to return.

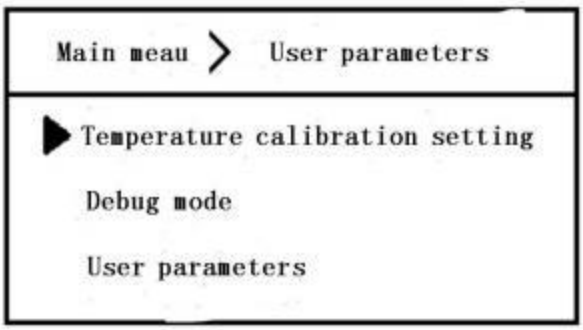

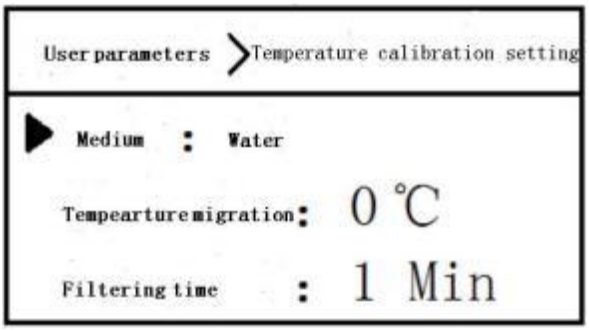

- **Automatic Debugging**

Press the "-" key to select the "Debug mode", and then press the "Confirmation" key to enter the "Automatic measurement mode". At this time, it will display "Automatic debugging..." and observe the echo waveform until the debugging is completed.

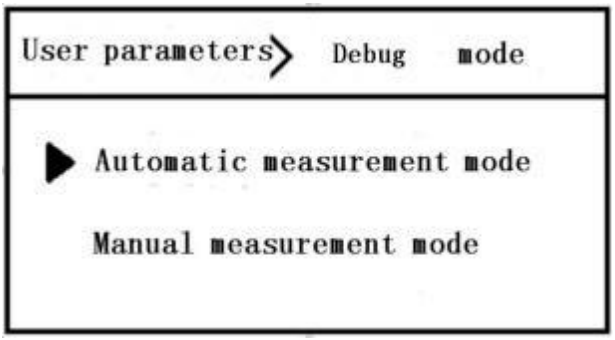

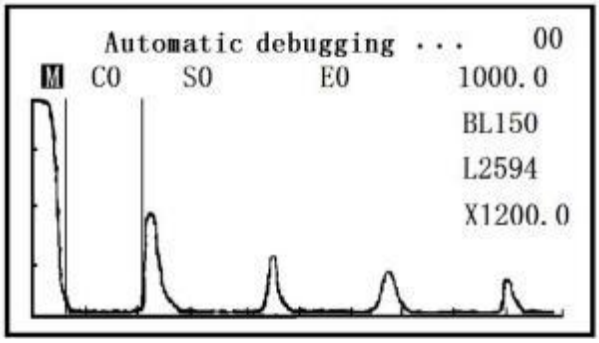

- **Echo Signal Judgment**

After the automatic debugging is completed, a good echo waveform will be displayed in the waveform area. The working parameters after debugging will be shown at the top of the screen. The higher the gain value “Gxx,” the weaker the echo signal. The larger the blind zone value “BLxxx” on the right side, the larger the blind zone.

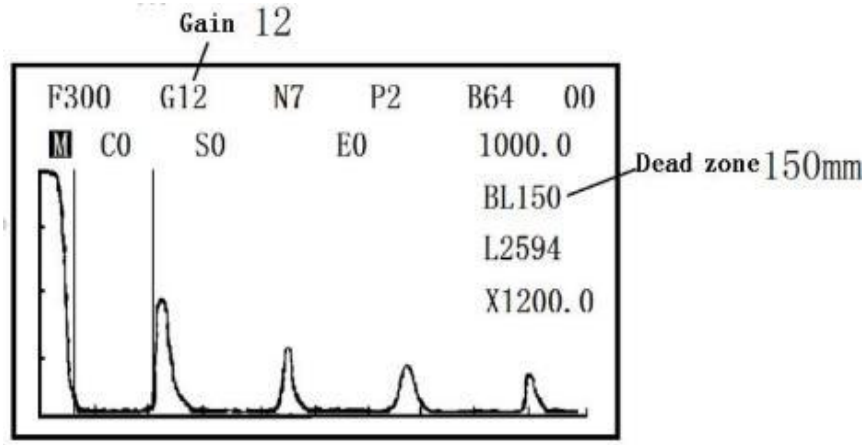

If both the gain (G) and blind zone (BL) values are high, you can fine-tune the probe position (or change the probe installation location) to minimize the gain and blind zone values as much as possible. Then re-enter the “Automatic Measurement Mode” and re-debug until the signal meets the requirements.

If the message “Automatic Debugging Fails!” is displayed after debugging, it indicates that the probe is not installed correctly (or the probe cable is not connected properly). Reinstall the probe and re-enter the “Automatic Measurement Mode” until debugging is successful.

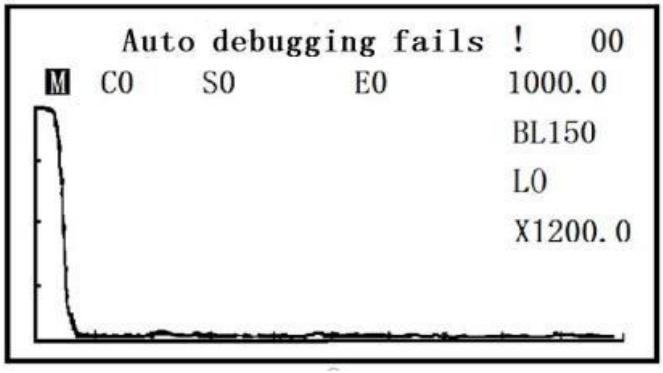

- **Quality Requirements for Echo Waveform**

The gain “Gxx” and blind zone “BLxxx” values should be as small as possible.
The waveform should have low noise without any clutter interference.
The amplitude of the primary echo should be higher than that of other echoes.
The waveform should be smooth and without bifurcation.
The echo position should be stable and reliable, and the fault code should be 00 (no faults).

- **Probe Base Installation**

After confirming that the echo waveform quality meets the requirements, slowly move the probe fixing base upward around the outside of the probe, and gently attach it to the tank wall. Do not touch the probe during the attachment process. As shown in step 4:

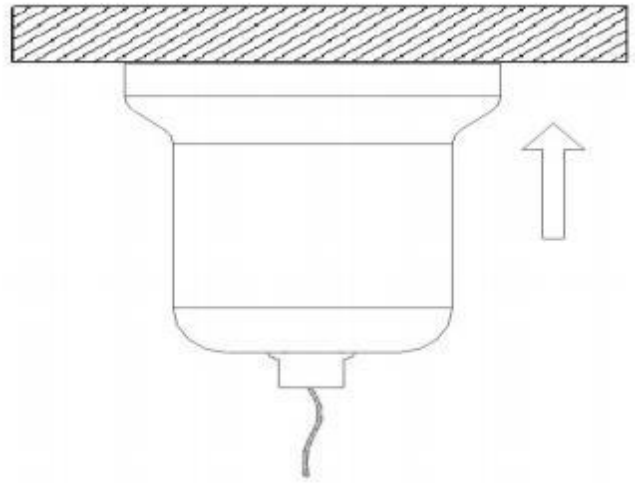

Step 4 Install probe base

For the non-ferromagnetic tank wall, the probe base can be installed by adding adapters, and the ferromagnetic adapter can be bonded to the tank wall. After the glue solidifies completely, the probe base can be adsorbed on the adapter. As shown in step 5:

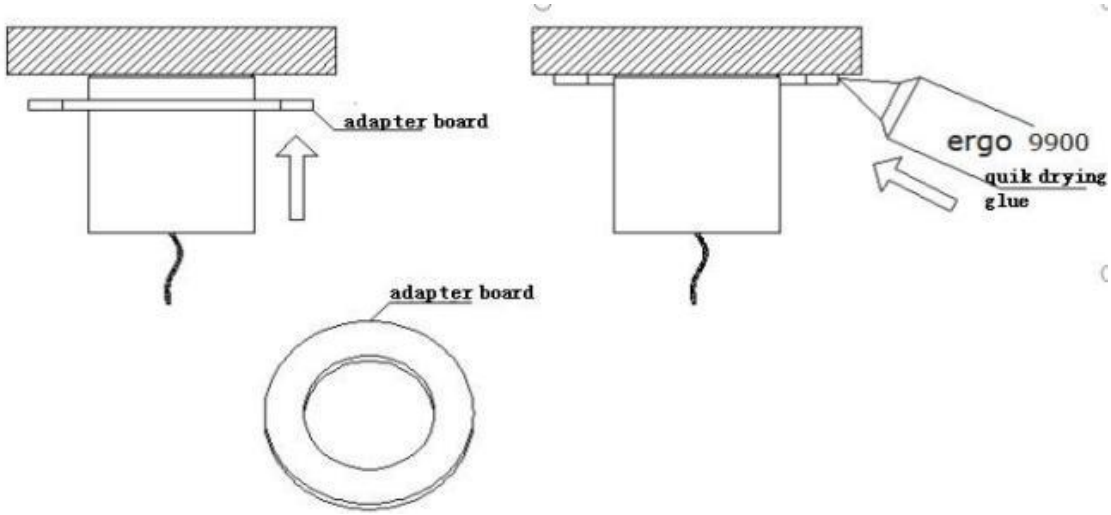

8.3.2 Installation and Debugging of Calibration Probe

- **Calibration Probe Installation**

If the instrument has diameter calibration function, the calibration probe needs to be installed and debugged.

First, ensure that the liquid level in the tank is at least 30 cm higher than the installation position of the calibration probe.

The installation steps for the calibration probe are the same as those for the measurement probe (sanding the tank wall, applying silicone grease, and installing the probe), with the only difference being the installation position. After the calibration probe is installed, use the probe base to secure it by adsorption to prevent it from falling off.

- **Calibration Probe Debugging**

The calibration probe cable is connected to the "CAL" terminal of the instrument (the core is positive and the shielding layer is negative). The terminal is shown in figure 3.

Press the "Menu" of the remote control, enter "User parameters", select "Debug mode" and press "Confirmation" to enter, press "-" down to select "Calibration automatic mode" and "Confirmation". At this time, it will display "Auto-debugging..." and observe the echo waveform until the debugging is completed.

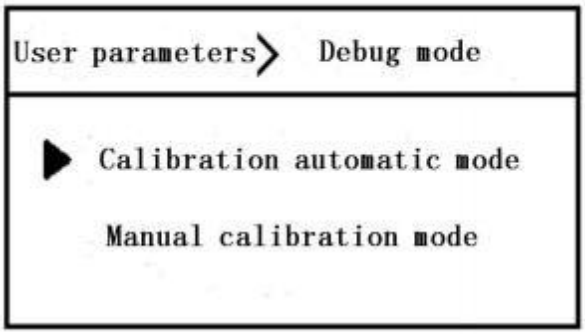

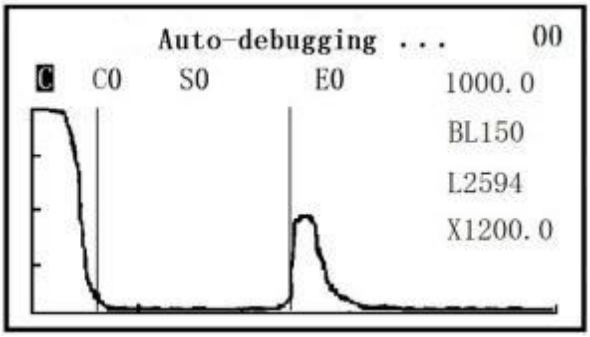

If "Automatic Debugging Fails!" Or the echo quality is poor, it is necessary to re-install the probe until the echo quality meets the requirements and the automatic debugging is successful.

8.3.3 Determination of Sound speed in Medium

- **Diameter Calibration Mode to Measure Medium Sound Velocity**

After the calibration probe is debugged successfully, a good echo waveform will be displayed in the waveform area; the working parameters after debugging will be displayed in the upper part of the screen, and a stable and reliable liquid level value Lxxxx will appear on the right side of the waveform.

Under this waveform interface, press the "right shift" button to select "C0" and "Confirmation", C begins to flicker, press the "+" button to change "C0" to "C1", and then "Confirmation" again. At this time, it will show "Calibrating..." and then show "Successful calibration".

After successful calibration, the "sound velocity" value displayed on the right side of the waveform will be updated to the V-calibrated sound velocity, and the liquid level value Lxxxx will be equal to the set calibration distance.

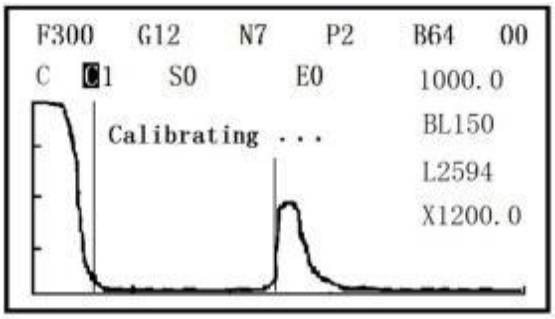

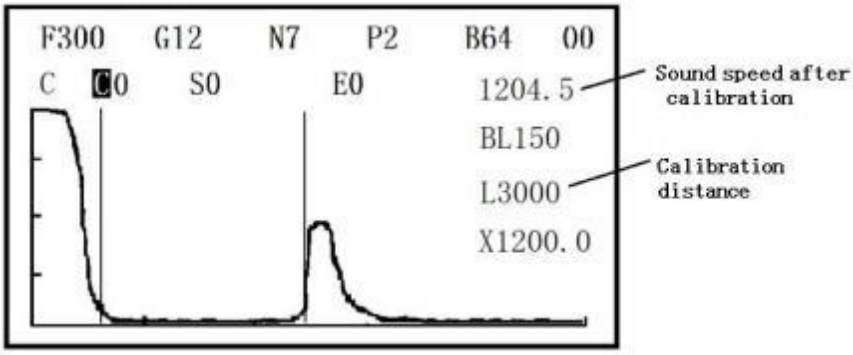

Note: When manual calibration is enabled, ensure that the current working mode is "Diameter calibration" mode or "Double calibration" mode.

Return to enter "User Parameters", facing the "Basic Setup" menu, set the parameter "Sound speed" to V-Calibrated Sound Velocity (Enter Integer Value, Round it up). After confirmation, press the "Return" to return.

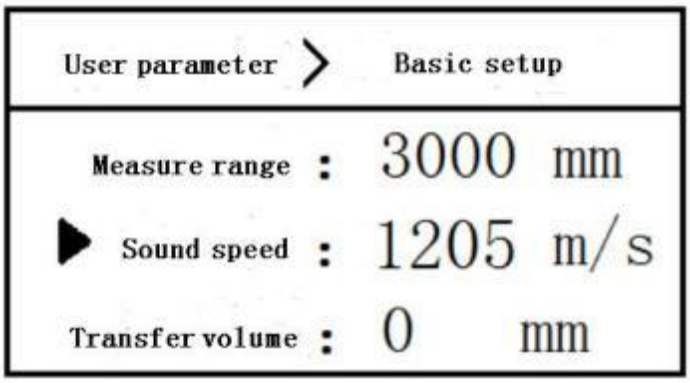

If the waveform of the calibration probe is good, the Lxxx liquid level value is stable and reliable, and the "Calibration failure" is displayed after calibration, it may be that the "Calibration distance" is set incorrectly or the medium type is very special.

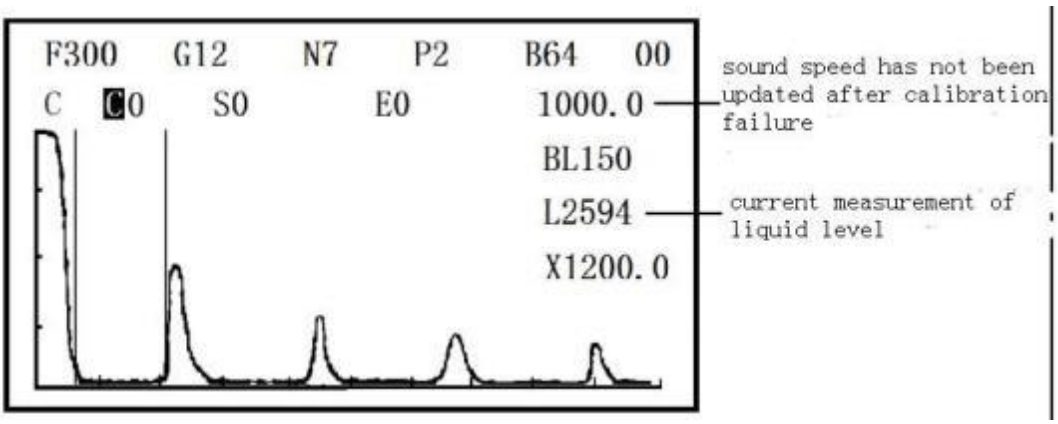

If the medium is special, the sound velocity of the medium can be calculated by displaying the current liquid level measurement value Lxxx:

Sound speed V = Calibration Distance *1000/Lxxxx ①

The unit of calibration distance is mm.

Then, enter the "Basic setup" menu, input the calculated "Medium sound velocity V" in the "Sound velocity", and "Return" after confirmation.

- **Determining the Sound speed of Medium when Measuring Mode with Single Probe Method:**

Method 1:

The measuring probe can be installed at the calibration probe position of the storage tank first, and the sound velocity of the medium can be calculated according to the formula ①.

Method 2:

If the liquid level height in the tank is known, the medium sound velocity V can be calculated by measuring probe at the bottom of the tank.

V = H×1000/Lxxxx ②

H is the actual liquid level height in the tank (mm).

Lxxxx is the current measured liquid level displayed on the waveform interface.

After calculating the sound speed, enter the "basic settings", input the calculated sound speed V in the "Sound speed" item, and "Return" after confirmation.

8.4 Instrument Installation and Wiring

- **Level gauge Installation Pipeline and Required Equipment**

The level gauge installation pipeline connection is shown in figure 8.

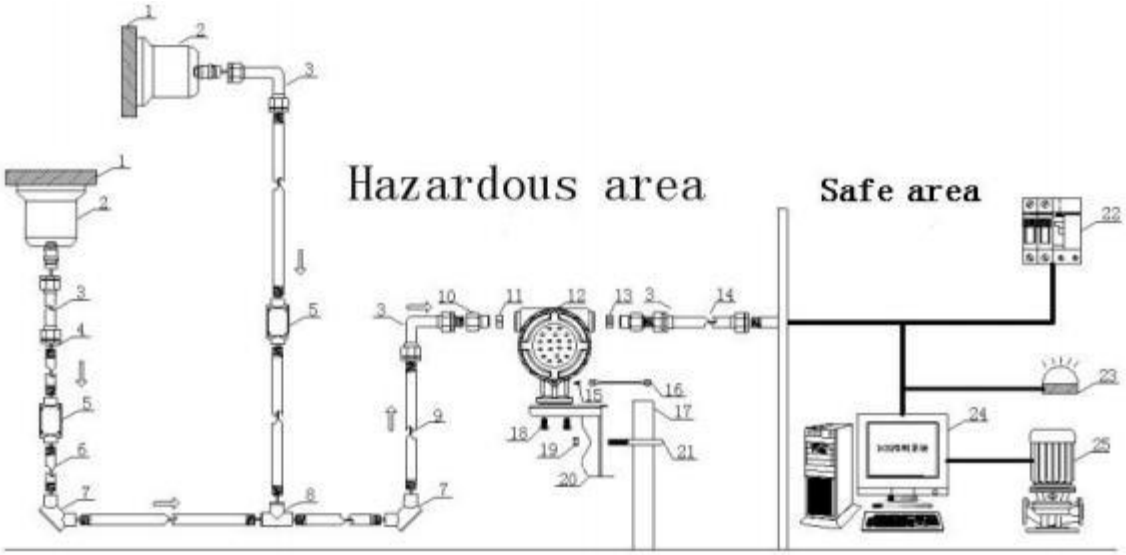

Figure 8 Schematic Diagram of Pipeline Connection for Level Meter Installation

The details of installation equipment are shown in the following table:

NO	Name	Specifications	Quantity	Note
1	Tank (wall)			
2	Probe Base		2	
3	Explosion-Proof Flexible Tube		4	User Self-provided
4	Shim		some	
5	Direct Threading Box		some	
6	Galvanized Pipe		some	
7	Bend Through Threading Box		some	
8	Three-Way Threading Box		1	
9	Probe Signal Cable		Optional	
10	Adapter	M20*1.5	Optional	
11	Seal	1 or 2 holes	1	
12	Host of Level Gauge	SK-WY	1	
13	Seal	2 holes	Optional	
14	Power Wires			User Self-provided
15	Earthing screw	M4*6	1	
16	Ground wire		1	
17	2 Inch Riser		1	User Self-provided
18	Internal Hexagonal Screw	M5	4	
19	Nut	M8	2	

20	Level Gauge Bracket		1	
21	Holder		1	
22	Isolated Safety Grille (with 24V distribution)		1	User Self-provided
23	Alarm Lamp			
24	Main Control Room (Control System)			
25	Pump Body/Valve			

Note: When the system is networked by RS485 communication, the level gauge must be equipped with isolation safety grille.The liquid level gauge shell must be reliably grounded.

- **Level Gauge Fixed**

Fixed Host as shown in figure 5.

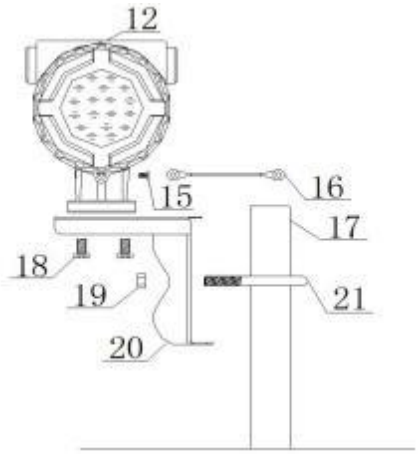

Figure 5 Fixed host of gauge

Note: One end of grounding wire (16) is fixed with wire screw (15) and instrument (12), and the other end of grounding wire is fixed with nut (19) and U-holder (21).

Attention:

Host installation should avoid direct sunlight on instrument display screen.

Host installation should avoid external heat source.

Instrument insulation protection box should be added in Alpine Area.

- **Pipeline Laying**

Lay the pipeline as shown in figure 6 protect the probe cable.

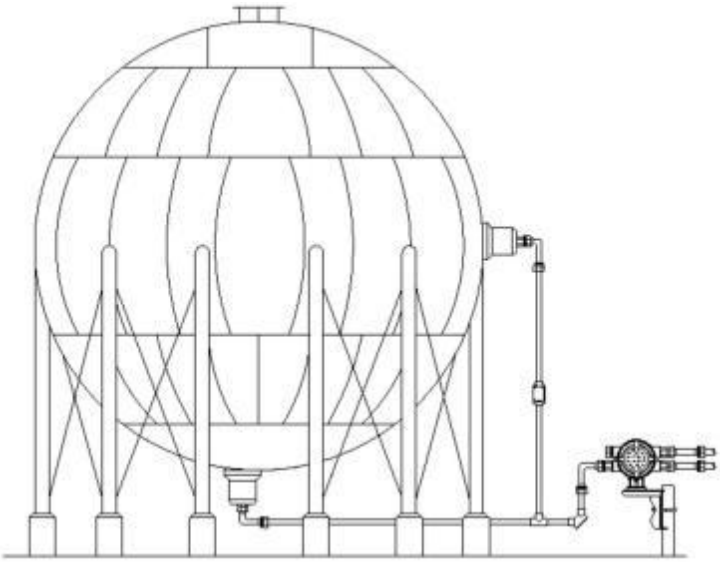

Figure 6 Installation of level gauge

Note: The installation and laying methods of spherical tank, horizontal tank and vertical tank can be shown with reference to figure 6.

Attention:

When threading, pay attention to protecting the probe. Do not force or move the probe. Take care to protect the cables. Do not scratch or cut them.

- **Cable Access Instrument**

Connect the cable to the instrument as shown in figure 7.

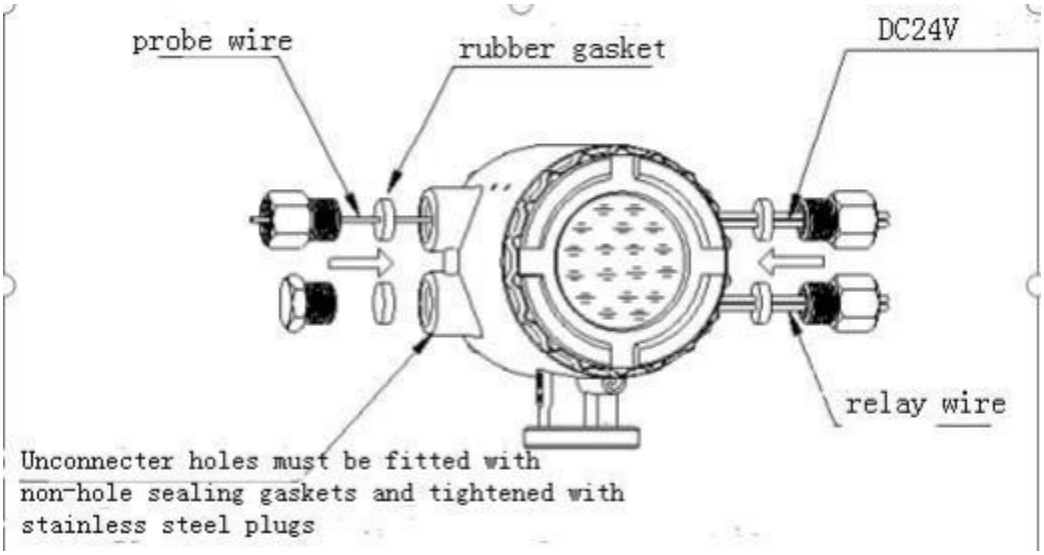

Figure 7 Instrument threading diagram

Attention:

The field interface must be consistent with the Host interface.

Host interface shall be sealed with rubber pad or explosion-proof filler.

All threaded joints shall be sealed with raw material belts.
The front and rear cover of the main engine are tightened to be waterproof and explosion-proof.

- **Wires Connection**

DC 24V power supply connects to orange "24V" terminal, measuring probe connects to MEA terminal, calibration probe connects to "CAL" terminal, temperature probe (or black shielding wire of composite probe) connects to "TEMP" terminal (core wire of probe wire is positive, shielding layer is negative), relay alarm connects to "RELAY" terminal, RS485 communication connects to black "485" terminal. Attention should be paid to the positive and negative poles of the cable. The terminal is shown in figure 3.

8.5 Functional Confirmation and Probe Sealing

- **Instrument Function Confirmation**

Verify that the liquid level of the instrument is normal and the output of 4-20mA is normal.
Verify that the additional functions are normal, such as temperature display, calibration, HART communication, Modbus communication, etc.

- **Confirmation of Echo Waveform**

Press the "Waveform" button to observe and measure the echo waveform of the probe, and confirm that the echo is good. Select the "M" on the left side above the waveform and press the "Confirmation" button. M begins to flicker. Press the "+" button to change "M" to "C", then "Confirmation" and "C" stops flickering. At this time, the waveform of the calibration probe is displayed. Observe the waveform of the calibration probe and confirm that the echo is good. Press the "Return" to return.

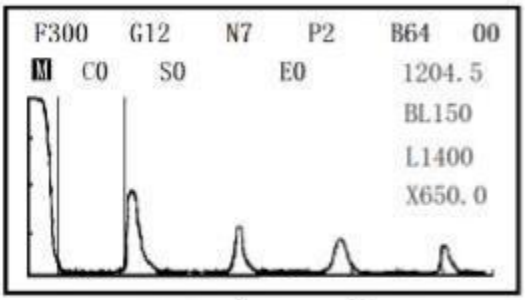

measure probe waveform

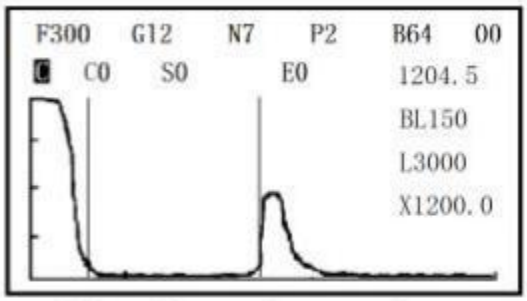

calibration probe waveform

- **Backup User Parameters**

After confirming that the probe waveform is good for measurement and calibration, enter the "Main menu", select "Backup user parameters", under "user parameters" menu and confirm "Backup success". Then, return to the main interface.

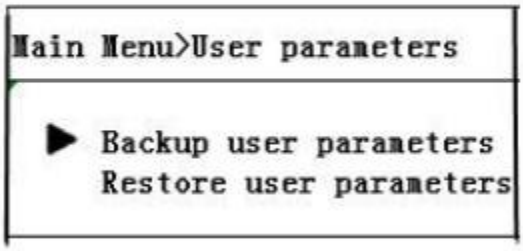

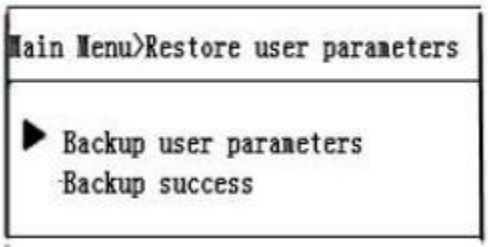

After backing up the working parameters, if the manual modification of the parameters are wrong and the original working parameters are forgotten, the user parameters can be restored in the menu.

- **Probe Seal**

Clean the outer side of the probe base and the joint of the tank wall, and evenly apply a week's waterproof sealant. As shown in figure 9.

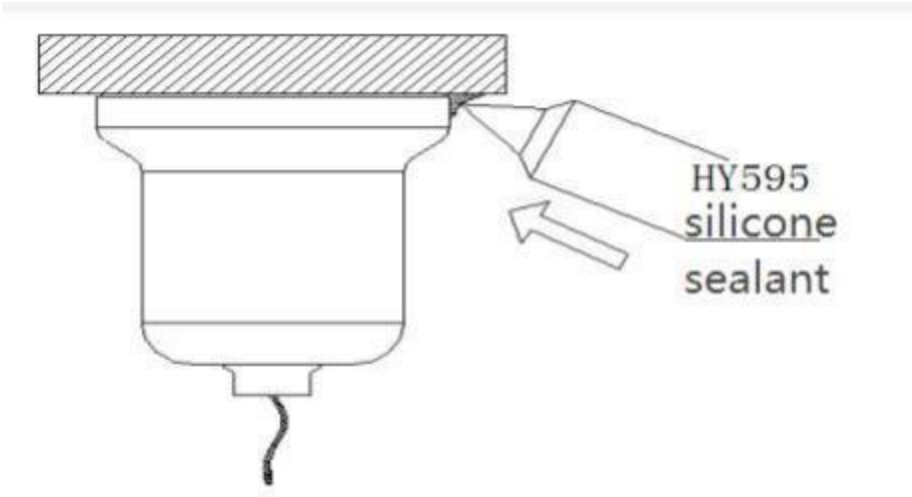

Figure 9 Apply sealant

9. Maintenance and Repair

- Attention should be paid to keeping the level gauge clean. Waterproof, moisture-proof, anti-corrosion and avoiding severe collisions and strikes by other objects should be achieved as far as possible.
- Avoid direct sunlight on the main body of the level gauge, stay away from heat sources and pay attention to ventilation. If the ambient temperature exceeds the rated temperature, corresponding cooling protection measures should be taken.
- When the ambient temperature is too low, the instrument protective box or other protective devices can be used for anti-freezing protection, and attention should be paid to keeping the level gauge dry.
- Level gauge and probe should be tested regularly. (The detection period is determined by the user according to the specific situation)

10. Fault Treatment

Fault	Reason	Solution
Without Display	Power supply error	Check whether DC 24V voltage and current meet the requirements.
	Wiring error	Check the connection is correct.
Level Values Display Instability	Excessive fluctuation of liquid level	Change the installation position of probe or reduce the fluctuation of liquid level.
	Weak echo	Use large range liquid level gauge or high power probe instead.
	Strong electromagnetic interference	Connect the host site with earth or shield.
Large Measurement Error	Error in setting calibration parameters	Check and modify calibration parameters.
	Long-term low liquid level,not meeting the calibration conditions	The liquid level is higher than the calibration height, and the automatic calibration is realized.Or manually modify the "sound speed" value.
	Calibration Probe without Signal	Check wiring and reinstall calibration probe.
No Echo Signal	Cable Fault	Check the probe wire and terminal.
	Liquid level entering dead zone	When the liquid level is higher than the blind area, it will return to normal automatically.
	Probe position is moved	Re-install the probe.
	Probe or Host fault	Contact customer service, repair or replacement.
Display Doubled Liquid Level	Inclination of probe installation	Re-install the measuring probe to ensure that the probe points to the vertical liquid level
The Blind Area Becomes Larger.	Increased sediment in tank	Sewage discharge, tank cleaning or change the installation position of probe.

11. Mode Selection

KUM	Non-Intrusive Level Gauge
	Item: Connection
	2: Two Wires
	4: Four Wires
	Item: Tanks Shape
	Q: Sphere Tank
	W: Horizontal Tank
	L: Vertical Tank
	Item: Tank Material
	M: Ferromagnetic
	O: Non Ferromagnetic
	Item: Max Measure Range
	3~50: 3m,5m,10m,15m,20m,30m,50m
	Item: Calibration Mode（Multiple selection）
	A: Diameter
	B: Temperature
	Item: Communication（Multiple
	M: Modbus
	H: Hart
	Item: Alarm
	D: Relay alarm
2601	2 Q M 3 A H D